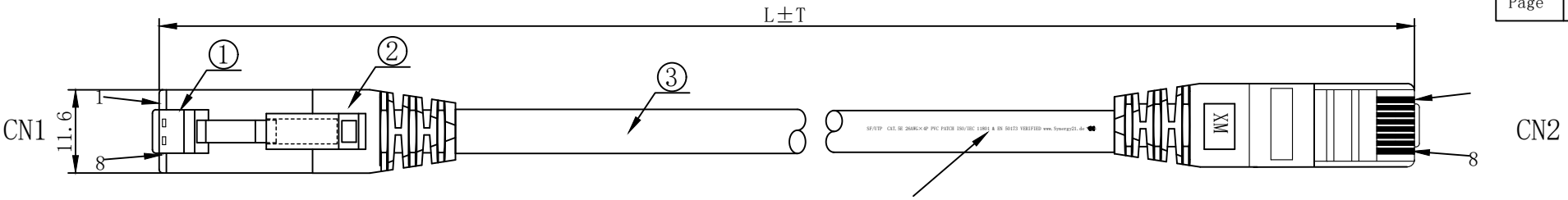

CAT.5E/Class D SF/UTP 26AWG×4P PVC PATCH ISO/IEC 11801 & EN 50173 VERIFIED www.Synergy21.de CE

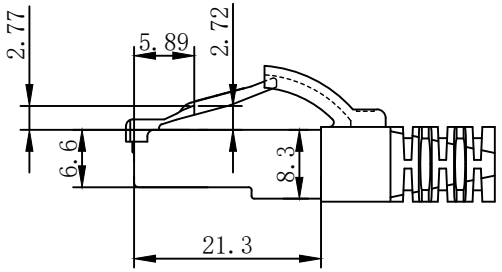

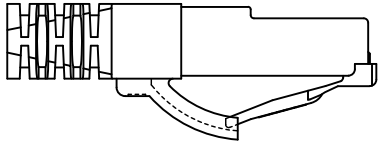

PIN OUT

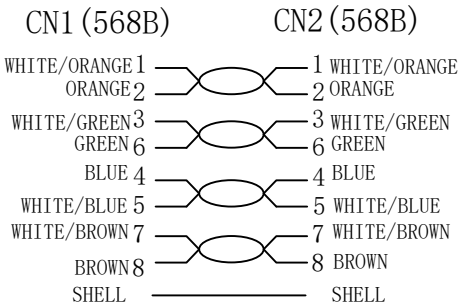

NOTE:

1. Electrical test:
   (1). 100% open short & miss wire test;
   (2). Insulation resistance:DC 300V 3MΩ;
   (3). Contactor resistance:15Ω;
2. ROHS 3.0 AND REACH COMPLIANT
3. Operating temperature:-20℃~+60℃
4. Fluke Channel Test ISO 11801 Channel Class D
5. Minimum of the bending radius is 60mm

MATERIAL LIST:

NO.	PARTS NAME	SPECIFICATION STANDARD	QT'Y	REMARK
⑥	LABEL	NO DRY GLUE LABEL	1	
⑤	MINI TIE	PE MINI TIE(POSSESS METAL)	2	
④	POLYETHYLENE BAG	SYNERGY 21 SLIP PE BAG	1	
③	CABLE	SF/UTP CAT.5e 26AWG(CCA)*4PAIRS+DRAIN+AL-FOIL +BRAID(AL-MG),CABLE JACKET:PVC OD=5.7±0.2mm	1	
②	Over mold	80A PVC ,COLOR:SEE THE CHART	2	
①	CONNECTOR	RJ45 8P8C'S SHIELDED THE SHELL PLATED NICKEL , PIN GOLD PLATED 3u"	2	

BY	CHK	REVISION RECORD MODIFICATIONS	DATE	REV.
Hasia		change "ROSH 2.0" to "ROSH 3.0"	2022-02-25	A4
		Change Print Word	2021-01-27	A3
		Increase the minimum bend radius	2018-11-30	A2
		Change Over mold	2018-08-31	A1
		ADD "CE" MARK IN THE PRINT	2016-01-08	A

SYNERGY 21					
CUSTOMER NO.			ITEM NO.	SEE THE CHART	
PRODUCT NAME	CAT.5e/Class D SF/UTP PVC	manufacture country:	CHINA	UNIT	MM
DRAWNBY	CHECKBY		APPOBY	DATE	
SYNERGY 21	SYNERGY 21		SYNERGY 21	2016-01-08	

CHART

COLOR:BALCK(PANTONE BLACK 3C)		
ITEM NO.	LENGTH	PACKING
S215103	250±30	SYNERGY 21 BAG A
S215110	500±30	SYNERGY 21 BAG A
S215117	1000±30	SYNERGY 21 BAG A
S215123	1500±50	SYNERGY 21 BAG A
S215130	2000±50	SYNERGY 21 BAG A
S215137	3000±70	SYNERGY 21 BAG A
S215144	5000±70	SYNERGY 21 BAG B
S215151	7500±150	SYNERGY 21 BAG B
S215158	10000±200	SYNERGY 21 BAG B
S215165	15000±200	SYNERGY 21 BAG C
S215172	20000±300	SYNERGY 21 BAG C
S215178	25000±300	SYNERGY 21 BAG C
S215184	30000±300	SYNERGY 21 BAG D

COLOR:RED(PANTONE 199C)		
ITEM NO.	LENGTH	PACKING
S215102	250±30	SYNERGY 21 BAG A
S215109	500±30	SYNERGY 21 BAG A
S215116	1000±30	SYNERGY 21 BAG A
S215122	1500±50	SYNERGY 21 BAG A
S215129	2000±50	SYNERGY 21 BAG A
S215136	3000±70	SYNERGY 21 BAG A
S215143	5000±70	SYNERGY 21 BAG B
S215150	7500±150	SYNERGY 21 BAG B
S215157	10000±200	SYNERGY 21 BAG B
S215164	15000±200	SYNERGY 21 BAG C
S215171	20000±300	SYNERGY 21 BAG C
S215177	25000±300	SYNERGY 21 BAG C
S215183	30000±300	SYNERGY 21 BAG D

COLOR:YELLOW(PANTONE 135C)		
ITEM NO.	LENGTH	PACKING
S215099	250±30	SYNERGY 21 BAG A
S215106	500±30	SYNERGY 21 BAG A
S215113	1000±30	SYNERGY 21 BAG A
S215119	1500±50	SYNERGY 21 BAG A
S215126	2000±50	SYNERGY 21 BAG A
S215133	3000±70	SYNERGY 21 BAG A
S215140	5000±70	SYNERGY 21 BAG B
S215147	7500±150	SYNERGY 21 BAG B
S215154	10000±200	SYNERGY 21 BAG B
S215161	15000±200	SYNERGY 21 BAG C
S215168	20000±300	SYNERGY 21 BAG C
S215174	25000±300	SYNERGY 21 BAG C
S215181	30000±300	SYNERGY 21 BAG D

COLOR:GREEN(PANTONE 3278C)		
ITEM NO.	LENGTH	PACKING
S215101	250±30	SYNERGY 21 BAG A
S215108	500±30	SYNERGY 21 BAG A
S215115	1000±30	SYNERGY 21 BAG A
S215121	1500±50	SYNERGY 21 BAG A
S215128	2000±50	SYNERGY 21 BAG A
S215135	3000±70	SYNERGY 21 BAG A
S215142	5000±150	SYNERGY 21 BAG B
S215149	7500±150	SYNERGY 21 BAG B
S215156	10000±200	SYNERGY 21 BAG B
S215163	15000±200	SYNERGY 21 BAG C
S215170	20000±300	SYNERGY 21 BAG C
S215176	25000±300	SYNERGY 21 BAG C
S215182	30000±300	SYNERGY 21 BAG D

COLOR:BLUE(PANTONE 7462C)		
ITEM NO.	LENGTH	PACKING
S215098	250±30	SYNERGY 21 BAG A
S215104	500±30	SYNERGY 21 BAG A
S215111	1000±30	SYNERGY 21 BAG A
S215118	1500±50	SYNERGY 21 BAG A
S215124	2000±30	SYNERGY 21 BAG A
S215131	3000±70	SYNERGY 21 BAG A
S215138	5000±150	SYNERGY 21 BAG B
S215145	7500±150	SYNERGY 21 BAG B
S215152	10000±200	SYNERGY 21 BAG B
S215159	15000±200	SYNERGY 21 BAG C
S215166	20000±300	SYNERGY 21 BAG C
S215173	25000±300	SYNERGY 21 BAG C
S215179	30000±300	SYNERGY 21 BAG D

BY	CHK	REVISION RECORD MODIFICATIONS	DATE	REV.
		NEW	2009-04-21	A

SYNERGY 21				
CUSTOMER NO.		ITEM NO.	SEE THE CHART	
PRODUCT NAME	CAT.5e/Class D SF/UTP PVC	manufacture country:	CHINA	UNIT MM
DRAWNBY	CHECKBY	APPOBY	DATE	
SYNERGY 21	SYNERGY 21	SYNERGY 21	2012-08-06	

CHART

COLOR:GREY(PANTONE 421C)		
ITEM NO.	LENGTH	PACKING
S215100	250±30	SYNERGY 21 BAG A
S215107	500±30	SYNERGY 21 BAG A
S215114	1000±30	SYNERGY 21 BAG A
S215120	1500±50	SYNERGY 21 BAG A
S215127	2000±50	SYNERGY 21 BAG A
S215134	3000±70	SYNERGY 21 BAG A
S215141	5000±70	SYNERGY 21 BAG B
S215148	7500±150	SYNERGY 21 BAG B
S215155	10000±200	SYNERGY 21 BAG B
S215162	15000±200	SYNERGY 21 BAG C
S215169	20000±300	SYNERGY 21 BAG C
S215175	25000±300	SYNERGY 21 BAG C
S215181	30000±300	SYNERGY 21 BAG D
S215198	40000±400	SYNERGY 21 BAG D
S215199	50000±400	SYNERGY 21 BAG D

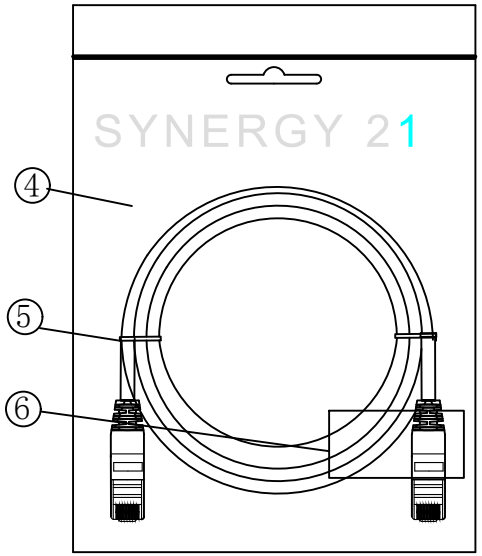

					SYNERGY 21					
					CUSTOMER NO.			ITEM NO.	SEE THE CHART	
					PRODUCT NAME	CAT.5e/Class D SF/UTP PVC	manufacture country:	CHINA	UNIT	MM
		NEW	2009-04-21	A	DRAWNBY	CHECKBY		APPOBY	DATE	
BY	CHK	REVISION RECORD MODIFICATIONS	DATE	REV.	SYNERGY 21	SYNERGY 21		SYNERGY 21	2012-08-06	